New Inventions.

Alarm Gauge for Steam Boilers.

J. Hopkinson Smith, of the city of Baltimore, has taken measures to secure a patent for an improved alarm water gauge for steam boilers. The nature of the invention consists in attaching to a float a metal tube, which works directly through a stuffing box on the top of the boiler, and has an opening on one side, which is at such a hight that while the water is at a safe level, it is either within or above the stuffing box, but when the water falls to a dangerous level, it enters the steam space in the boiler, and allows the steam to pass through it into the tube and up to the whistle at its top, thus alarming the engineer, and informing him of the low state of water in the boiler. To the bottom of the float there is attached a horizontal blade, which tends to keep it (the float) steady in the water, and prevents it from being much affected with the foaming and boiling of the water.

Improvement in Cotton Gin Saws.

J. H. Watson, of Palmyria, Ga., has applied for a patent on Cotton Gin Saws. The saws now in common use for cotton gins have the spaces between the teeth made with acute angular bottoms, which is the cause of much cotton being cut or *napped*, and drawn or twisted into kinks. They are also the cause of considerable difficulty in stripping or clearing the saws by the brushes. The object of this improvement is to obviate the above evils, the spaces therefore between the teeth of the improved saws are made with wide bottoms either round or square—the round are preferred. This improvement obviates the napping of the cotton, allows it to be easier blown off from the saws by the brushes, and gins it faster and better.

New Railroad Switch.

An improvement in the operation of railroad switches, has been made by Asa A. Simmons, Narrowsburg, N. Y. It consists in attaching one end of the ordinary connecting rod of a switch to a circular plate at any point, between the center of said plate and its periphery, according to the length of stroke required. The circular plate is attached to one end of a horizontal shaft, at the opposite end of which there is a lever, by which the peculiar plate and shaft are turned, and the connecting rod and switch moved. An index is secured to the circular plate, for the purpose of denoting the exact position of the switch. Measures have been taken to secure a patent.

Machine for Softening Flax.

Robert Boyack, of Poughkeepsie, N. Y., has invented an improved machine for softening flax. The improvements consist in having a vertical reciprocating plate with a slot through it, which works between two pairs of fluted rollers. The flax to be operated upon and softened passes from a feed trough, between one pair of the fluted rollers and through the slot in the reciprocating plate, and from thence through the other pair of fluted rollers. The reciprocating plate subjects the flax to a rubbing frictional action, which renders it soft and pliable, without injury to its fiber. Measures have been taken to secure a patent.

Castors or Foot Rollers.

Samuel Barker, of this city, has taken measures to secure a patent for an improvement in Castors, which is of no small importance for heavy bodies, such as iron safes, to which they may be applied. The improvement consists in having the fork in which the roller is placed work or rotate within a secket or guard, the shoulder of the fork having a washer resting upon it to prevent friction; the washer is within the guard.

Improved Brick Kiln.

J. S. Speights, of Baltimore, Md., has made a useful improvement in Brick Kilns, for which he has taken measures to secure a patent. The object of the improvement is to effect the burning of bricks in kilns by burning coal in a more perfect and economical manner. The fire grates and air passages are arranged in such a manner that very perfect combustion, and a saving of the heat are obtained. The combustion can be controlled in all parts of the kiln, and the heat can be concentrated on any part of it. These are very important and necessary regulations to a perfect kiln. The use of coals, so as to obtain advantages from this fuel, superior to those which can be derived from wood, for burning bricks, presents important advantages to all those who manufacture them. The use of coal for burning brick is not new; the improvements only relate to the better and more economical use of such fuel.

VARIABLE GAUGE WHEELS FOR RAILROAD CARS.

Figure 1.

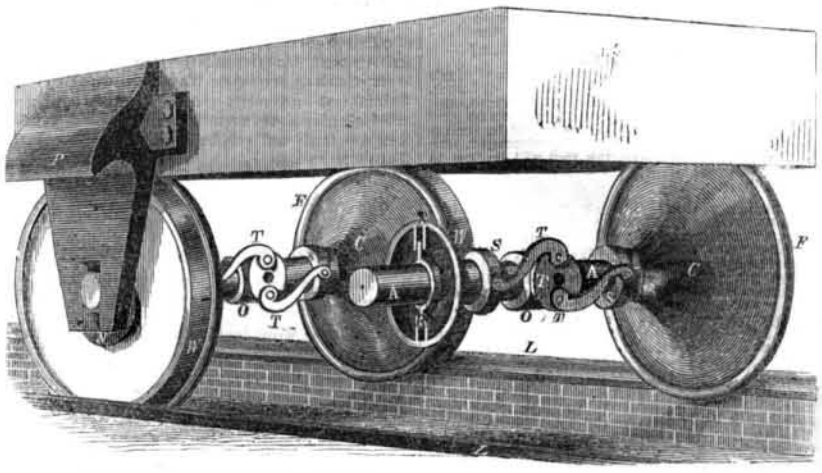

The annexed engravings represent an improvement on Wheels for Railroad Cars, invented by Messrs. W. W. & J. A. Solliday, of Philadelphia, Pa., for which measures have been taken to secure a patent. The improvement consists in making the flanges of wheels movable on the line of the axle, and this is done in the following manner, figure 1 being a perspective view, and fig. 2 a transverse section, the same letters referring to like parts on both figures:—

A hollow conical case, or its equivalent, is added to an ordinary wheel, and is made narrowing from the flange to the middle of the axle, and it encloses the latter at that point. As presented in the figures, the wheel, W, and case, C, are cast together, and fitted to the axle A so as to move lengthwise upon it, between a strong collar, O, in the middle, and another, N, at the end of the axle. Each wheel is allowed sufficient play between these collars, to suit the different gauges of track for which the cars are intended to be used. Upon the center of the

Fig. 2.

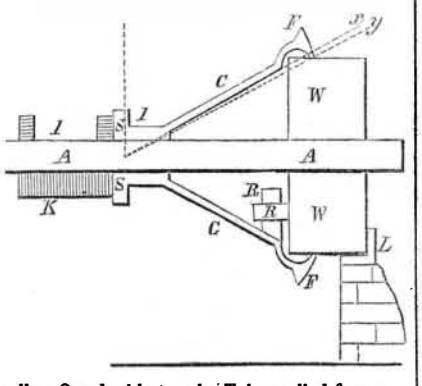

collar, O a double toggle, T, is applied for moving each pair of wheels backwards or forwards simultaneously upon the axle. In practice, however, it may be found that converging grooved rails upon a track of sufficient length will answer the purpose as well. That part of each case, S, near the central collar, is made to project, in order that a suitable key may be applied to clamp each pair of cars together to the narrow, and key them apart to the widest gauge; said key having cross-cuts fitting the cases and axle respectively. Suitable pits under the track, will give access for shifting the wheels and introducing the key. Strong projections, P, must be placed upon the side of the truck for sustaining the weight of the car upon a movable track at the station, while the wheels are being shifted, but converging grooved rails may supersede the necessity of this latter arrangement also. In the section, fig. 2, the wheel and case are made separate from each other, so that the flange and case to which it is joined may slide in and out upon the wheel rim. The wheels in this instance are keyed to the axle in the ordinary way. The cases are provided with holes for discharging dust, &c. In fig. 1 the wheels are shown as made to turn the axle by means of carriers, R; in fig. 2 such carriers are made to move the cases simultaneously with the wheels and axle. Rails shaped like the letter L must be made to support the outside of the wheel rims, while the flanges are being shifted, in case they are movable upon the rims of the wheels. In fig. 2, W is the wheel; C is the case; S is the projection upon the case, F; L is the flange rail; R is the carrier; K is the key introduced between the projections upon the cases and over the axle with a space (1) fitting the case behind the projections at I, when used as a clamp. The inventors say:—"The greatly increased width of that part of the wheels bearing upon the axle, in fig. 1, will make them nearly equal to keyed wheels in their running qualities. The waste play of the flange between tracks will not be great; the difference being the sines of the angles expressed by the dotted lines, *x y*, fig. 2, drawn from a point in the middle of the axle to the flange itself, and upon a base crossing the axle at right angles through that point. The space between the lines represents the play necessary to allow the flanges to move freely across the rims of the wheels. The additional weight of the wheels will be equally balanced upon their centers, thus causing but little increase in the wearing of the journals."

For more information address Messrs. Solliday, No. 186 Callowhill street, Philadelphia.

Recent Foreign Inventions.

Sugar Moulds—Henry Bessemer, of London, pat.—The inventor constructs cylindrical sugar-loaf molds having a movable bottom, so that the syrups may drain off from a surface whose area is equal to the body of the mold, whereby the mould may be made of a much greater hight, because this increased area of outlet will allow the syrups to drain off quickly, which the hydrostatic pressure of a tall column also materially assists; this increased capacity of the mold will render it much too heavy to be handled by the workmen in the usual way. Mr. Bessemer, therefore, prefers to make them fixtures, or movable only with revolving apparatus, somewhat like a turn-table, and instead of detaching the loaf from the mold by a blow, he employs an hydraulic press or other suitable mechanical force to push out the loaf from the mold.

India Rubber.—Charles Goodyear, formerly of this city, but now residing near London, has recently taken out five patents in England for india rubber good manufactures, with which his name is more prominent than that of any other man.

1. The first patent is applicable to coarse fabrics, the object being to render it water-proof without impregnating and filling up the interstices. It consists in passing a piece of cloth with undissolved india rubber between two heated rollers driven with unequal velocities, by which means a thin coat is caused to adhere to the prominent parts of the surface of the cloth. After this a very thin sheet of india rubber is made to adhere to it by pressure between two other rollers.

2. The second patent is for making substitutes for bristles out of india rubber, so as to fit them for making brushes. The india rubber is combined with sulphur and a metallic oxyde, then the mass subjected to heat until it becomes somewhat hard, when it is forced through perforations in a metal plate, forming bristles, they are hardened to the proper degree afterwards by heat.

3. The third patent is for manufacturing pens, pencils, and instruments used for writing and drawing. The pens are used for writing with ink, but the pencils are merely for marking on slates. These are made by combining slate powder with india rubber, then moulding and hardening them. He also combines slate powder with sheets of india rubber and forms marking slates.

4. The fourth patent is for purifying indi rubber, by subjecting it in a finely subdivided state to the action of an alkaline solution and then washing it well.

5. The fifth patent is for the manufacture of beds, seats, and other hollow flexible articles. The invention consists in employing knit or looped fabrics to contain air. Two surfaces of such fabrics are coated with india rubber cement, and are made to adhere at intervals, but where the hollow cells are to be, paper is interposed to prevent adhesion, and bands of non-elastic fabrics are cemented between the two surfaces to separate the cells. The cells may all be connected by a vulcanized india rubber tube and be inflated, thus forming an air mattrass or an air cushion. Such beds and cushions we think will not be very comfortable.

Spontaneous Combustion.

The Farmers' Factory, at McMinville, about 25 miles below Sparta, in this State, was burnt down on Sunday, 5th of this month, caused, as is said, by the spontaneous combustion of a pile of clean cotton waste, which had been lying in a corner of the mill for two years. Will cotton in a dry place, I mean card strippings, that are perfectly dry and free from oil, ignite spontaneously? I don't believe it will. Do you think a chance bunch of oily waste that had been used in cleaning machinery would cause it to ignite, or to be still more inquisitive, will cotton saturated with sperm or lard oil ignite spontaneously, and if so, how long would it take to do so in a dry place, such as a cotton mill heated by steam? I know that linseed oil will, and I have often heard of waste houses taking fire where there was no linseed oil.

The fire in the Farmers' Factory broke out at four o'clock P. M., whilst the watchman and another were in the room. They were aroused by a noise similar to a hard blast of wind striking one side of the house, with a stream of fire shooting from the center of the waste pile. The flames spread with such rapidity that they were unable to save anything but a few bales of cloth, the books were in an upper room, and were lost. No insurance. Loss, $95,000.

J. T. K.

Sparta, Tenn, Feb. 21st, 1854.

[Cotton perfectly free from oil would not ignite spontaneously, but a very small quantity of waste cotton, perhaps a handful, which had been used to wipe the machinery, and thrown into the heap, might have set it all on fire. On one occasion we saw 200 lbs. of cotton yarn take fire spontaneously, which had been saturated with a preparation of olive oil and soda, and had been perfectly dried. The kind of oil is not material. Persons in cotton factories should be very careful of waste cotton, which has been used for wiping the machinery.—Ed.

Superintendent of the New York and Erie Railroad.

We understand that D. C. McCallum, of Owego, has been appointed General Superintendent of this great railroad. The news gives us no small amount of pleasure; he is an able and an upright man, combining qualities of the very highest order to enable him to fill this situation with distinguished ability. He is a practical man, of sound judgment, great ingenuity, and assiduity.

© 1854 SCIENTIFIC AMERICAN, INC