Science and Art.

The Form and Uses of Paper.

It is light, soft, and fleecy as snow, it protects the finest cutlery; pressed into the form of a roller, it becomes as hard as metal; and turned in a lathe, is used as an instrument for manufacturing paper itself. It is a package for the common wares, and a thin slip of it pays for an estate or a cargo of the richest merchandise. It now constitutes the chief money of the world. The bulk of all commerce is carried on by its means. All the wealth of the opulent classes consists of bits of paper. Preserving the impressions of priceless skill, jealously guarded in portfolios, or surrounded with rich frames, it is among the most valued possessions of the man of genius; at the same time it is proverbially the cheapest of all materials. Playing cards, trays of all kinds, drinking vessels, boxes, moldings and cornices for rooms, panels for apartments, and bulkheads for ships, are all made of paper. It covers our walls, and boards for binding books, frames for pictures, toys for children, ornaments for boudoirs, are amongst the few of the countless uses to which ingenuity has applied old rags. Perhaps the most singular part of the whole is, that paper is made from articles which have no value except as materials for its manufacture. The vilest refuse—our cast-off garments, the beggar's rags, the waste of cotton, worn out ropes, all of which we should be troubled to dispose of—is converted by the paper maker into an article indispensable to civilized man.

Patent Alarm Bed.

The annexed engravings represent, in a forcible manner the alarm bed of J. Carroll House, of Lowville, Lewis County, N. Y., for which a patent was granted on the 17th of last July.

Figure 1 is a perspective view showing how the bed has operated upon its occupant, who recklessly dared to sleep beyond his allotted period of rest. Fig. 2 is an outline perspective. Fig. 3 is a section of a plan view. Fig. 4 is a section of the back rails and tilting frame, showing the manner in which the hook and catch lock into each other; and fig. 5 is a section of the end rails of the tilting frame, and a view of the clock, head board, and rail. Like letters refer to similar parts.

The bedstead is made in any of the known styles, with the exception that one of the side rails is left out, but the remaining parts retain their relative positions. The posts, head board, and rail, and the like parts of the foot of the bedstead are permanently fitted together. One side rail, J, is then put in and fastened with screws. The corner braces, P, are then fastened firmly to the back, and end rails, N and L, by screws. This completes the bedst ead proper.

A round shaft, S, of iron has one of its bearings at one end in a metal plate in a post, and the other end passing through a hole in the opposite post. Collars are secured on the shaft between which is fastened a stirrup hasp to the side rail, J, by screws. This hasp admits of a rolling motion in shaft S, but not an end motion. At *a a* are fastened the hooks, fig. 4; these are fitted in place by keys. Upon the outer end of shaft S, is a square shoulder, upon which is placed the weighted lever, E, held by nut *h*. F is a lever pawl, having its fulcrum on a screw, *j*. It is so arranged that whenever the support at the opposite end is withdrawn, it will turn upon this screw, and drop, as shown in fig. 1.

m is a bevelled strip, grooved upon its inner surface, and fastened to the back of the head board. To this is fastened the shelf, *y*, which has an aperture in it over the groove in strip *m*. O, figs. 2 and 5, represents a small iron rod passing through this aperture, and the groove, and it has its point of rotation in the metal shoe, *f*. It is kept in place by a thin plate on the top of shelf *y*, beneath which is a washer, on the rod, O. There is a small arm soldered to this rod near its lower end, and it is curved horizontally. At the upper end of rod O, is a small straight arm, *l*, fig. 5. It stands in such a relative position to the lower curved small arm at the foot of O, that when it is at right angles to the head board, the lower arm will project a short distance beyond the edge of the rail, N. M, in fig. 1, is an alarm clock of any of the usual styles of construction. It is fastened to shelf *y*, by screws. The door of the clock is removed, also the minute hand, as the latter would, in its revolution, come in contact with arm *l*, the hight of which is determined by the clock, it being necessary that it should stand over fig. 6 on the dial.

H G I K is a frame of hard wood, with side and end rails. It is of the same width as the bedstead, and in length such that it freely plays between the end rails, L N. Upon the under side of its end rails, K I, are iron bearings (one, *c*, shown.) These are placed at about two-thirds the width of the frame—from front to back—and they work in metal boxes, *d*, in the end rails of the bedstead. Upon the back strip of the frame are catches, *b*, fastened to screw bolts, W; these catches correspond in position to the hooks, *a a*, on shaft S.

This light but stout frame is corded or slatted, and fitted to receive any kind of mattrass and bed; *p* is a clothes fastener, two or three may be used to retain the clothes in place when the bed assumes an inclined position.

HOUSE'S PATENT ALARM BED.

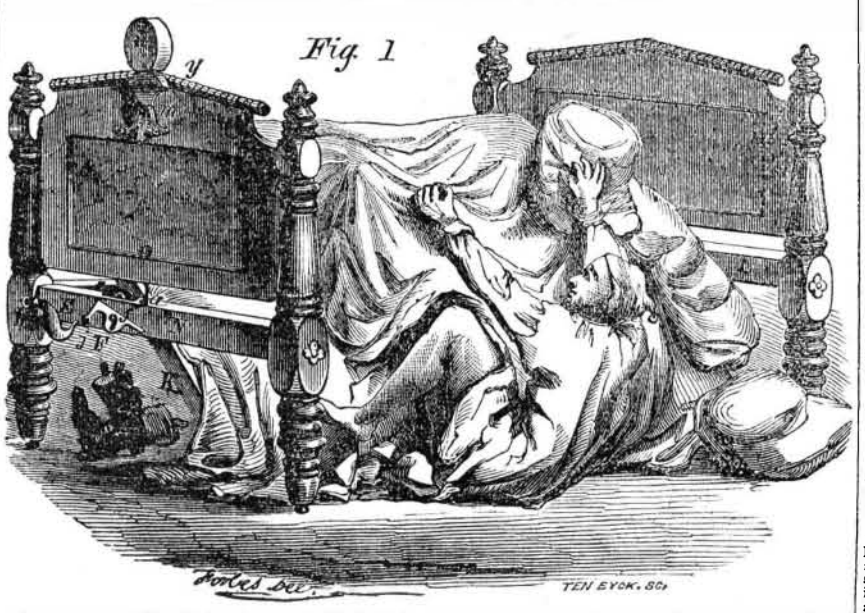

Operation—The light frame, G H I K, is placed in a horizontal position, and the buttons, *g g*, slid under its front. The bed is then made, and the clothes and sheets tucked and drawn beneath the clothes spring, *p*. The weighted lever, E, is now raised to a horizontal position, and by so doing a slight rotation of shaft S, is produced, which causes the hooks, *a a*, to take into the catches, *b b*, and bring up the pawl, F, under the lip of the lever, E, turning the upright rod, O, so that its curved arm at the foot shall slide beneath the pawl, F. This turning of rod O, will bring the upper small arm, *l*, at right angles to the face of the clock. The clock is set so that at the hour a person wishes to rise, the hour hand, *r*, fig. 5, will have arrived at 6; thus, if a person wishes to get up at 4, the clock must be set at 12, and so on. The alarm of the clock is now wound up, so as to have it ring when the hour hand, *r*, comes in contact with the small projecting arm, *l*. The hooks, *g g*, are then withdrawn, and the incumbent of the bed disposes himself to sleep under the clothes. Time with the hour hand, *r*, now moves on; at the appointed hour the alarm sounds, and if heard, by sliding in buttons, *g g*, the awakened person may arise with a grateful heart. But if he snores on, when the hour hand, *r*, comes in contact with the arm, *l*, it causes rod, O, to rotate a short distance, thus withdrawing the small arm on its foot from under pawl, F, which then drops, and by so doing the weighted lever, E, is relieved of its support, it drops, and rotates the shaft, S, unlocking the hooks, *a a*, from the catches, *b b*, and the bed frame is then tilted

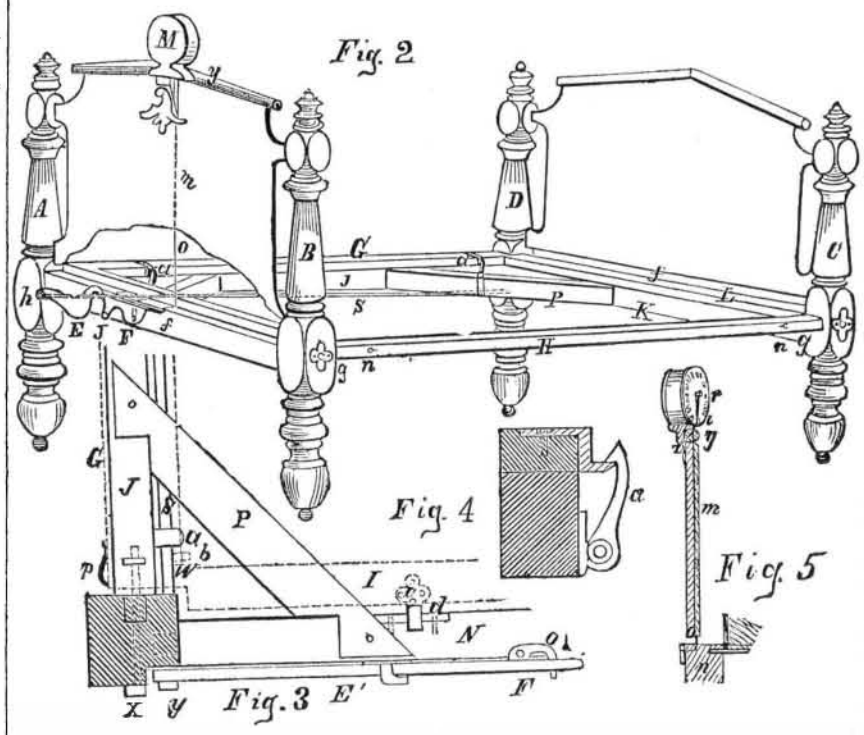

over, as depicted in fig. 1. It will thus be seen that this is a tilting bed, operated by an alarm clock, which can be set for any hour, to give the person reposing on it, any number of hours to sleep from 1 to 12. In many cases, such beds are no doubt of great use, so as to arouse a person at a particular hour for an important transaction.

Every person will perceive that this alarm bed well deserved a patent. It is a conservator of one of the most excellent qualities of a business man, viz.: "punctuality;" and fig. 1 is a powerful illustration of the way it argues and enforces the necessity of cultivating this virtue. Any sinner sleeping beyond a certain hour deserves to be tumbled out of the blankets in the manner so successfully accomplished by Mr. House.

This bedstead has been in use for nearly a year, and has proven to be a valuable and useful invention. It can be attached to any of the bedsteads in use, and can be put up by any cabinet maker or carpenter. It is on exhibition at the Fair of the American Institute, in the Crystal Palace; and further information may be obtained in person or by letter addressed to the patentee, at the Dey Street House, this city, until October 20th; after that at Lowville, N. Y.

Substitute for the Potato.

The "Chinese Yam" has been introduced into France, and cultivated with considerable success. It is stated that it offers to be a good substitute for the potato, and that its yield is very great.

Literary Notices.

The United States Magazine—This periodical has become one of the most beautiful, interesting, and instructive in our country. The number for this month commences the publication of the "Lay of the Last Minstrel," illustrated with numerous wood cuts. It also contains a very excellent article on public libraries, with engravings of the most distinguished of them, both in Europe and in America. A clever article on the manufacture of musical instruments is illustrated with engravings of the extensive and beautiful factory of Carhart, Needham, and Co., Twenty-third street, this city, for manufacturing melodeons. Published by J. M. Emerson, Spruce street, this city.

A Voice to America—This volume consists of a series of well written essays upon the national affairs of the United States. These contributions, it is understood, are the joint productions of different writers of ability, each having selected and discussed the subject upon which he considered himself best informed. They all tend to a common object, viz.:—the preservation of our republican liberties and free institutions. The various rocks and quicksands upon which, in times past, other nations have been wrecked, are vividly pointed out; while, at the same time, much salutary counsel relative to the individual rights and duties of American citizens is introduced. Some persons may object to this book as being unnecessarily severe in its strictures upon Popery and foreign influence; but, as a whole, its circulation can hardly be otherwise than beneficial. New York; published by Edward Walker, 114 Fulton street.

Stray Leaves from the Book of Nature—By M. Schele de Vere, of the University of Virginia. Seldom have we read a more channingly written volume, or one that contains so much and such delightful knowledge. From title page to "finis," it is one continual series of useful facts gathered with consummate skill from nature, animate and inanimate. The earth, with all its geological, botanical, and animal wonders; the ocean, with its vast heaving bosom, and its myriad forms of life; the heavens, with their countless worlds of light and mysteries unspeakable—all are made to contribute something of striking interest. New York: G. P. Putnam & Co., publishers, 10 Park Place.

Blackwood's Magazine—This old favorite for September contains "Zaidee," a romance, continued. The leading article is "Life in the Interior of Russia," giving an account by an eye witness of great experience, of the social condition of the people in that empire. It is a most instructive and ably written paper. "Notes on Canada, and the north-west States of America," by a British traveler, are full of spice, discrimination, and very clear views of the "go ahead American pioneers" in the Western World. These Notes of themselves are worth the price of the magazine. The other articles are also good. Published by Leonard Scott, & Co., No. 54 Gold street, this city, who also publish all of the standard foreign reviews.

The Nautical Magazine—For this month, contains some capital articles. The leader is on "Stability in Vessels," and the next is a very full illustrated description of the new steamer *Arago*. Published by Griffiths & Bates, No. 115 Nassau street, New York.

Inventors, and Manufacturers

ELEVENTH YEAR!

PROSPECTUS OF THE

SCIENTIFIC AMERICAN.

This work differs materially from other publications being an ILLUSTRATED PERIODICAL, devoted chiefly to the promulgation of information relating to the various Mechanic and Chemic Arts, Industrial Manufactures, Agriculture, Patents, Inventions, Engineering, Millwork, and all interests which the light of PRACTICAL SCIENCE is calculated to advance.

Every number of the *SCIENTIFIC AMERICAN* contains *Eight Large Pages*, of reading, abundantly illustrated with *ENGRAVINGS*,—all of them engraved expressly for this publication.

All the most valuable patented discoveries are delineated and described in its issues, so that, as respects inventions, it may be justly regarded as an *ILLUSTRATED REPERTORY*, where the inventor may learn what has been done before him in the same field which he is exploring, and where he may bring to the world a knowledge of his own achievements.

REPORTS OF U. S. PATENTS granted are also published every week, including *Official Copies* of all the PATENT CLAIMS. These Claims are published in the Scientific American *in advance of all other papers*

Mechanics, Inventors, Engineers, Chemists, Manufacturers, Agriculturists, and *People in every profession of life*, will find the Scientific American to be of great valu in their respective callings. Its counsels and suggestions will save them *Hundreds of Dollars* annually, besides affording them a continual source of knowledge, the experience of which is beyond pecuniary estimate. Much might be added in this Prospectus, to prove that the Scientific American is a publication which every Inventor, Mechanic, Artisan, and Engineer in the United States should patronize; but the publication is so thoroughly known throughout the country, that we refrain from occupying further space.

TERMS :—$2 a-year; $1 for half a year.

Southern, Western, Canada Money, or Post Office Stamps taken at their par value for subscriptions. Letters should be directed (invariably post-paid) to

MUNN & CO.,
128 Fulton street, New York

CLUB RATES.

Five Copies for Six Months,	$4
Ten Copies for Six Months,	$8
Ten Copies for Twelve Months,	$15
Fifteen Copies for Twelve Months,	$22
Twenty Copies for Twelve Months,	$28

☞ For List of splendid *CASH PRIZES*, payable January 1st, 1856, see Editorial page.

© 1855 SCIENTIFIC AMRICAN, INC.